ARK
Room 1303-4,13/F, Block A, Seaview Estate, 2 Watson Road, North Point Hong Kong T 26336383 F 26330933

SPECIFICATION OF SANITARY FITTINGS (CLUBHOUSE)

•PROJECT:	**7-9 PING LAN STREET, AP LEI CHAU**
•CLIENT:	WANG ON
•JOB NO:	I215
•DATE:	20250414
•REVISION:	-

ARK
Room 1303-4,13/F, Block A, Seaview Estate, 2 Watson Road, North Point Hong Kong T 26336383 F 26330933

SANITARY SCHEDULE	Project:	7-9 PING LAN STREET, AP LEI HAU
	Client:	WANG ON
	Job No:	I215
	Date:	250414

SENSOR BASIN MIXER — CODE: C-SF-01

Supplier: Massford (HK) Ltd
Contact: Clement Lee
T: 2891 6860 / 9861 0123
F: 2834 3029
E: Clementlee@massford.com

Item: SENSOR BASIN MIXER
Origin: Italy
Model: "AXOR" 38120140 + 16180180 Wall mounted sensor mixer
Colour: PVD Brushed bronze colour
Dimension: refer to drawings
Finish: Brushed
Location: Clubhouse female restroom
Delivery: -
Remark:
- 225mm Spout, 230V operate
- HKWSD NO.: C20180749
- WELS: TM19-0069

Notes:

Product Image:

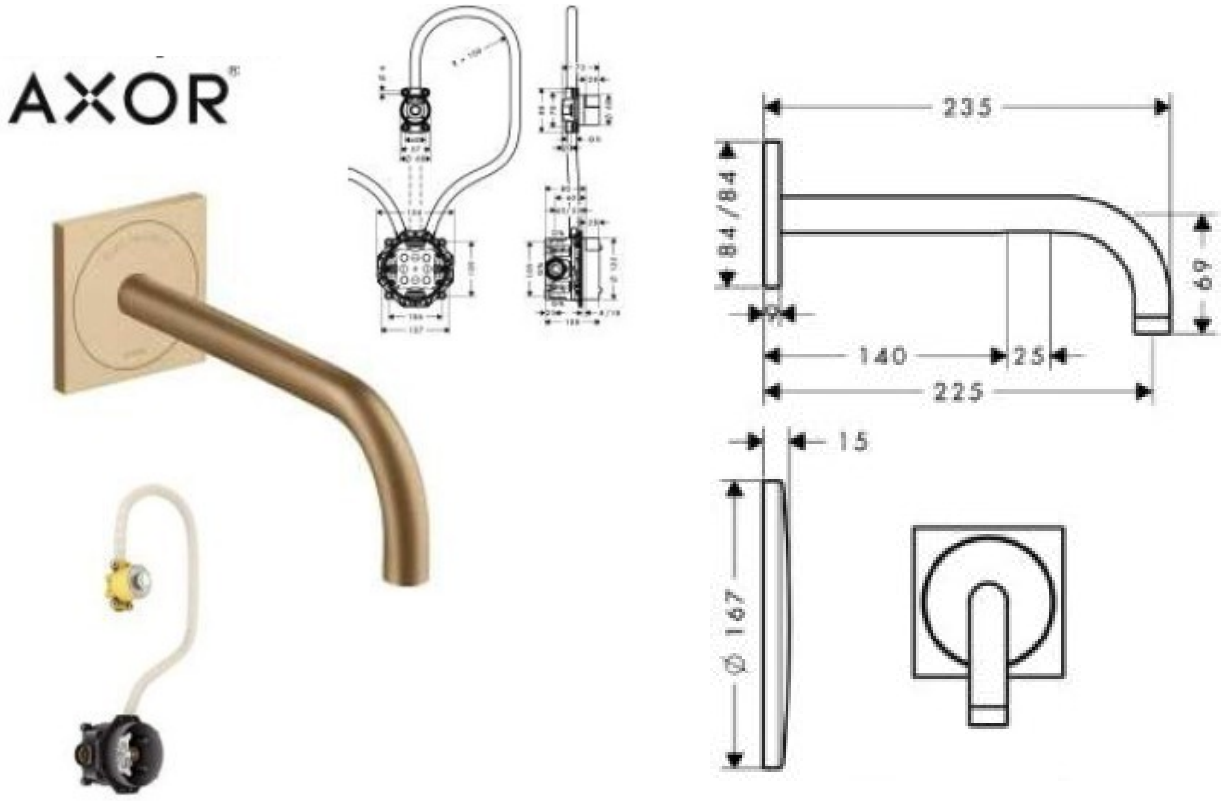

Revision	Date	Revision	Date

ARK
Room 1303-4,13/F, Block A, Seaview Estate, 2 Watson Road, North Point Hong Kong T 26336383 F 26330933

SANITARY SCHEDULE	Project:	7-9 PING LAN STREET, AP LEI HAU
	Client:	WANG ON
	Job No:	I215
	Date:	250414

BASIN

CODE: C-SF-02

Supplier:	Massford (HK) Ltd	**Item:**	BASIN
Contact:	Clement Lee	**Origin:**	-
T:	(852) 2891 6860 / 9861 0123	**Model:**	"FLAMINIA" 5057-NEO BLACK 420mm Dia. Under counter wash basin
F:	(852) 2834 3029		
E:	clementlee@massford.com		
		Colour:	BLACK
		Dimension:	Refer to drawings
		Finish:	-
		Location:	Clubhouse female restroom
		Delivery:	-
		Price:	-
		Remarks:	-

Notes:

Product Image:

Item Photo Image & Details :

FLAMINIA.

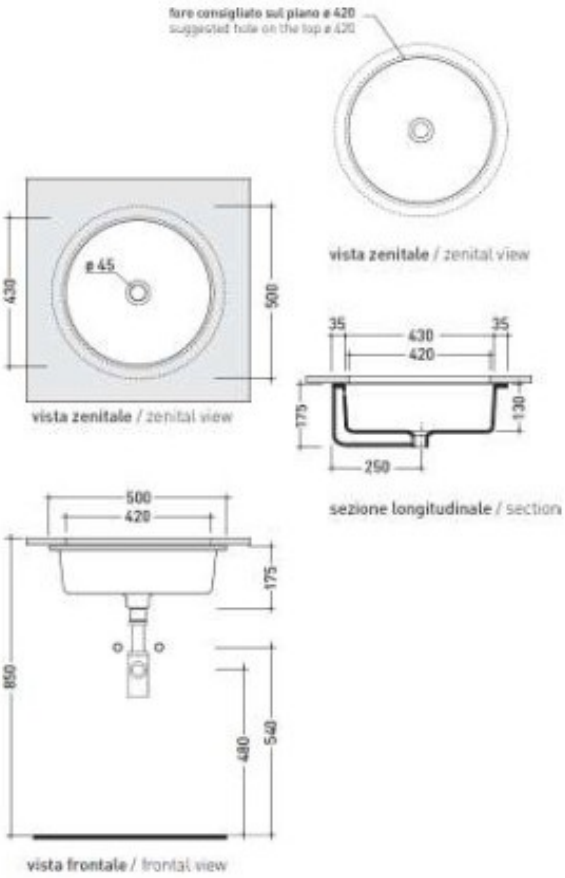

Revision	Date	Revision	Date

ARK
Room 1303-4,13/F, Block A, Seaview Estate, 2 Watson Road, North Point Hong Kong T 26336383 F 26330933

SANITARY SCHEDULE		Project:	7-9 PING LAN STREET, AP LEI HAU
		Client:	WANG ON
		Job No:	I215
		Date:	250414

WATER CLOSET	CODE:	C-SF-03

Supplier:	Massford (HK) Ltd	**Item:**	WATER CLOSET & CISTERN
Contact:	Clement Lee	**Origin:**	-
T:	(852) 2891 6860 / 9861 0123	**Model:**	"DURAVIT" D-NEO 200309-002169 back to wall water closet with soft closing toilet seat and cover; with "GEBERIT" UP300 224.320.00.1 + "SIGMA" 80 115.861.00.6 Concealed cistern with hand wave flush actuator
F:	(852) 2834 3029	**Colour:**	White
E:	clementlee@massford.com	**Dimension:**	Refer to drawings
		Finish:	-
		Location:	Clubhouse female restroom
		Remarks:	HKWSD NO.: C20200402F (170.417.00.1); C20201184F (887.839.00.0); WELS: WC21-0105

Notes: page 1 of C-SF-03 (total 2 pages)

Product Image:

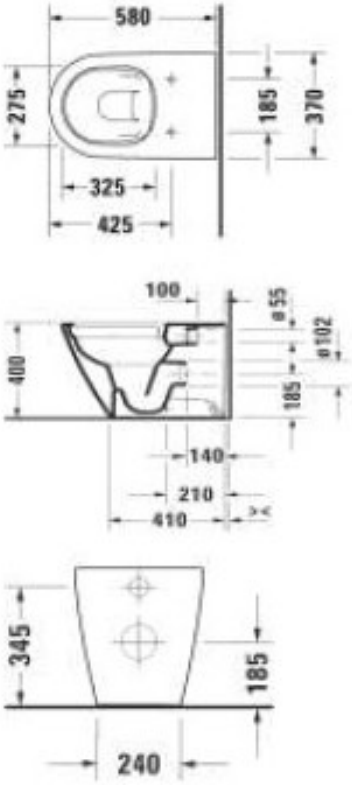

Revision	Date	Revision	Date

ARK
Room 1303-4,13/F, Block A, Seaview Estate, 2 Watson Road, North Point Hong Kong T 26336383 F 26330933

SANITARY SCHEDULE	Project:	7-9 PING LAN STREET, AP LEI HAU
	Client:	WANG ON
	Job No:	I215
	Date:	250414

WATER CLOSET — CODE: C-SF-03

Supplier:	GESSI (HK) Ltd	**Item:**	FLUSH PLATE OF WATER CLOSET
Contact:	Jessica Lee	**Origin:**	-
T:	(852) 5303 1229	**Model:**	"GESSI" water closet Flush Cover plate RIGATO 54671 GEBERIT SIGMA 8 & 12
E:	jlee@gessi.com	**Colour:**	#726 Warm Bronze Brushed PVD
		Dimension:	Refer to drawings
		Finish:	-
		Location:	Clubhouse female restrtoom
		Delivery:	-
		Remarks:	-

Notes: page 2 of C-SF-03 (total 2 pages)

Product Image:

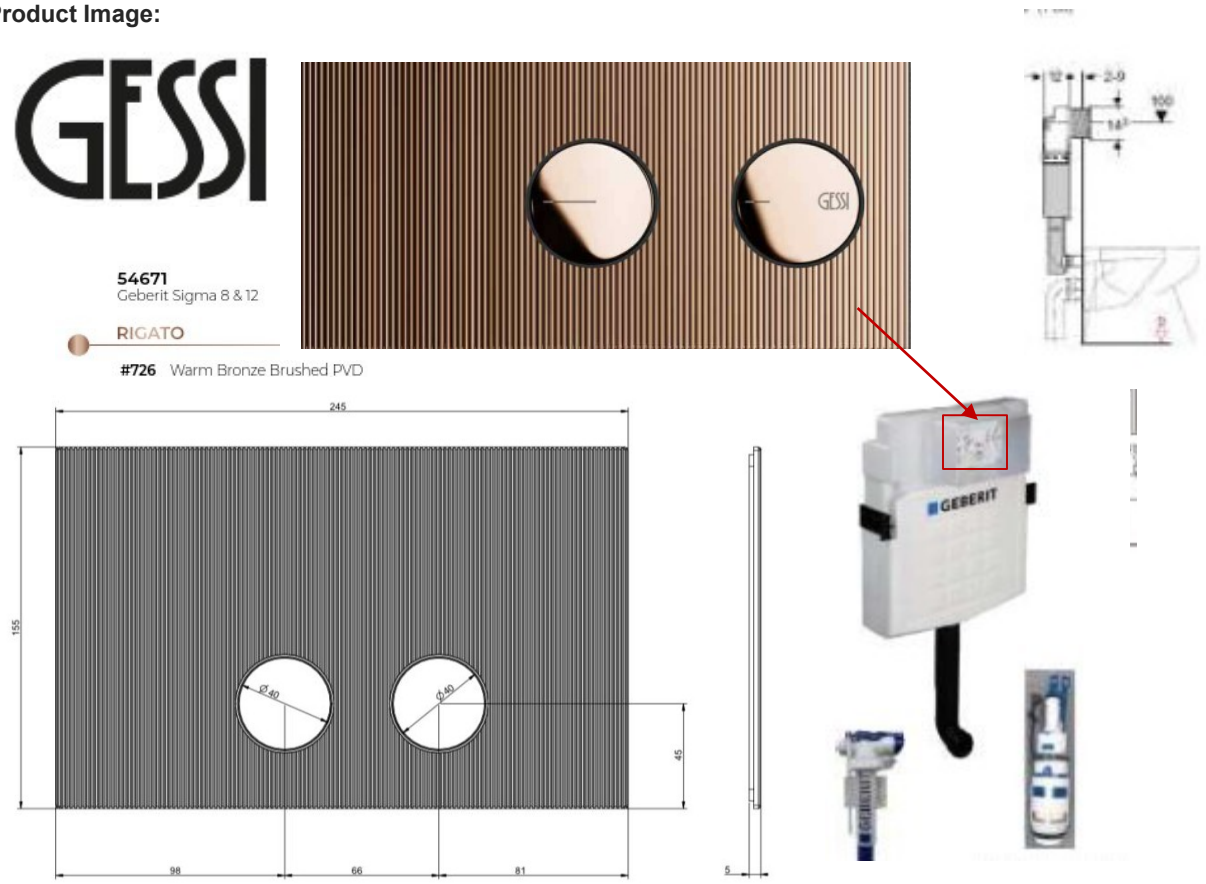

Revision	Date	Revision	Date

ARK
Room 1303-4,13/F, Block A, Seaview Estate, 2 Watson Road, North Point Hong Kong T 26336383 F 26330933

SANITARY SCHEDULE	Project: 7-9 PING LAN STREET, AP LEI HAU Client: WANG ON Job No: I215 Date: 250414

SENSOR SOAP DISPENSER CODE: C-SF-04

Supplier: ARNHOLD & co Ltd. **Contact:** Brain Li **T:** (852) 2806 4543 / 9888 9714 **F:** (852) 2887 1851 **E:** brianli@arnhold.com.hk	**Item:** SENSOR BASIN MIXER **Origin:** - **Model:** BDR-EA-6114-B00-N **Colour:** - **Dimension:** refer to drawings **Finish:** Brushed stainless steel **Location:** Clubhouse female restroom **Delivery:** - **Price:** - **Remark:** -

Notes:

Product Image:

Model: BDR-EA-6114-B00-N

Bain d'Or

Type: Exposed Installation, Liquid Type

Description:

Bain d'Or EA-6114-N Sensor Soap dispenser
Operation: 9V, 6 x AA Battery (Not Included)
Capacity : 700ml
Drop : **Liquid Type**
Liquid Supply : 0.5~2.5ml
Sensor distance : 5-9 cm
Ensure Bottom of dispenser with min. 25.5cm above any surface
Finish : Brushed Stainless Steel

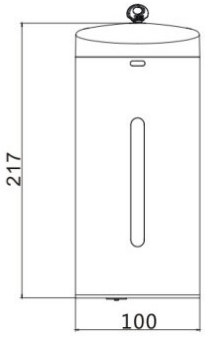

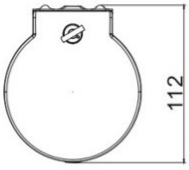

Revision	Date	Revision	Date

ARK
Room 1303-4,13/F, Block A, Seaview Estate, 2 Watson Road, North Point Hong Kong T 26336383 F 26330933

SANITARY SCHEDULE	Project:	7-9 PING LAN STREET, AP LEI HAU
	Client:	WANG ON
	Job No:	I215
	Date:	250414

TOWEL DISPENSER

CODE: C-SF-05

Supplier:	Massford(HK) Ltd.	**Item:**	PAPER TOWEL DISPENSER
Contact:	Clement Lee	**Origin:**	-
T:	2891 6860 / 9861 0123	**Model:**	“BRADLEY” BRA-255-MB
F:	2834 3029	**Colour:**	Black
E:	Clementlee@massford.com	**Dimension:**	refer to drawings
		Finish:	Brushed stainless steel
		Location:	Clubhouse female restroom
		Delivery:	-
		Remark:	-

Notes:

Product Image:

Line drawing:

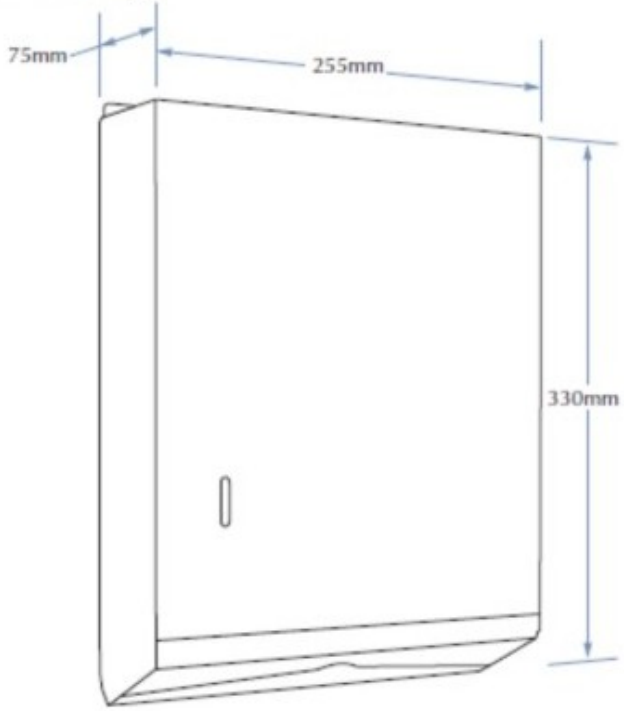

Revision	Date	Revision	Date

ARK
Room 1303-4,13/F, Block A, Seaview Estate, 2 Watson Road, North Point Hong Kong T 26336383 F 26330933

SANITARY SCHEDULE	Project: 7-9 PING LAN STREET, AP LEI HAU Client: WANG ON Job No: I215 Date: 250414

BASIN MIXER — CODE: C-SF-06

Supplier: Massford(HK) Ltd. **Contact:** Clement Lee **T:** 2891 6860 / 9861 0123 **F:** 2834 3029 **E:** Clementlee@massford.com	**Item:** SENSOR MIXER (DECK MOUNTED) **Origin:** - **Model:** "HANSGROHE" 31174140 Electronic Mixer, pre-adjust temperature **Colour:** PVD Brushed Bronze **Dimension:** refer to drawings **Finish:** Brushed stainless steel **Location:** Clubhouse male & disable restroom **Delivery:** - **Remark:** - 225mm Spout, 230V operate - HKWSD NO.: C20230686 - WELS: TM19-0069 GRADE 1

Notes:

Product Image:

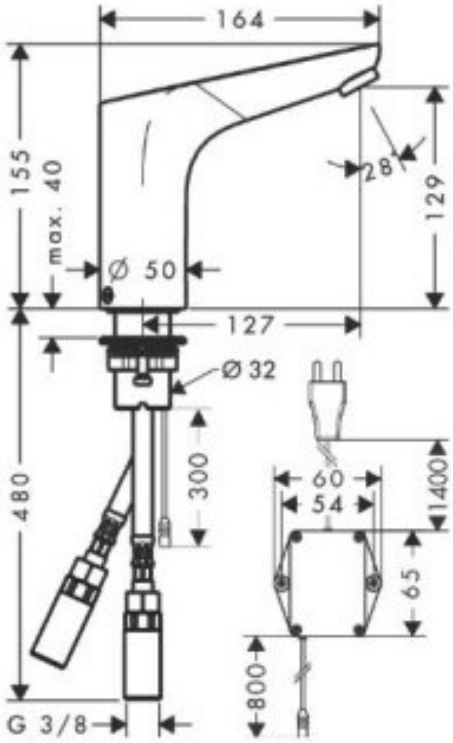

Revision	Date	Revision	Date

ARK
Room 1303-4,13/F, Block A, Seaview Estate, 2 Watson Road, North Point Hong Kong T 26336383 F 26330933

SANITARY SCHEDULE	**Project:**	**7-9 PING LAN STREET, AP LEI HAU**
	Client:	WANG ON
	Job No:	I215
	Date:	250414

WASH BASIN

CODE: C-SF-07

Supplier: Massford(HK) Ltd.
Contact: Clement Lee
T: 2891 6860 / 9861 0123
F: 2834 3029
E: Clementlee@massford.com

Item: WASH BASIN
Origin: -
Model: "SCARABEO" 8090 under counter wash basin with overflow, with 32mm CP Brass Bottle Trap with PVD Brushed bronze color; with free flow waste
Colour: Basin: white; Bottle trap: Bronze
Dimension: 467 x 305 x 155mm
Location: Clubhouse male & disable restroom
Delivery: -
Remark: -

Notes:

Product Image:

SCARABEO

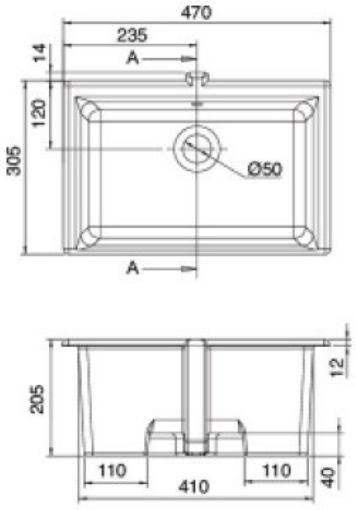

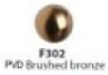

SEZIONE A-A

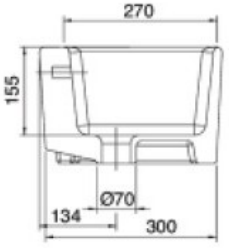

Revision	Date	Revision	Date

ARK
Room 1303-4,13/F, Block A, Seaview Estate, 2 Watson Road, North Point Hong Kong T 26336383 F 26330933

SANITARY SCHEDULE	Project:	7-9 PING LAN STREET, AP LEI HAU
	Client:	WANG ON
	Job No:	I215
	Date:	250414

WATER CLOSET — CODE: C-SF-08

Supplier: Massford(HK) Ltd.
Contact: Clement Lee
T: 2891 6860 / 9861 0123
F: 2834 3029
E: Clementlee@massford.com

Item: WATER CLOSET
Model: "DURAVIT" D-NEO-200209-094430 close-coupled water closet with L/M soft closing toilet seat & cover;
Flush valve: "MEITU" P69-243B (C20210686F)
Inlet Valve: "GEBERIT" 271.269.00.1 (C20200640F)
Colour: White
Dimension: 650 x 370 x 775mm
Location: Clubhouse male & disable restroom
Remark: MKS2 WE Connector,
WELS: WC22-0081 / WC-0080
"H2O PRO" 6220-AC wave on sensor dual flush operator with manual override button, AC operated

Product Image:

Revision	Date	Revision	Date

ARK
Room 1303-4,13/F, Block A, Seaview Estate, 2 Watson Road, North Point Hong Kong T 26336383 F 26330933

SANITARY SCHEDULE	**Project:** **7-9 PING LAN STREET, AP LEI HAU** **Client:** WANG ON **Job No:** I215 **Date:** 250414

GRAB BAR

CODE: CH-SF-09

Supplier: Massford (HK) Ltd
Contact: Sean wong
T: (852) 2891 6860 / 9856 5530
F: (852) 2834 3029
E: seanwong@massford.com

Item: GRAB BAR
Origin: GERMANY
Model: "HEWI" 900.36.00360-DC WALL MOUNTED GRAB BAR

Colour: Matt black
Dimension: Refer to drawing
Finish: Powder coated
Location: Clubhouse male & disable restroom
Delivery: -
Remarks: -

Notes:

Product Image:

HEWI

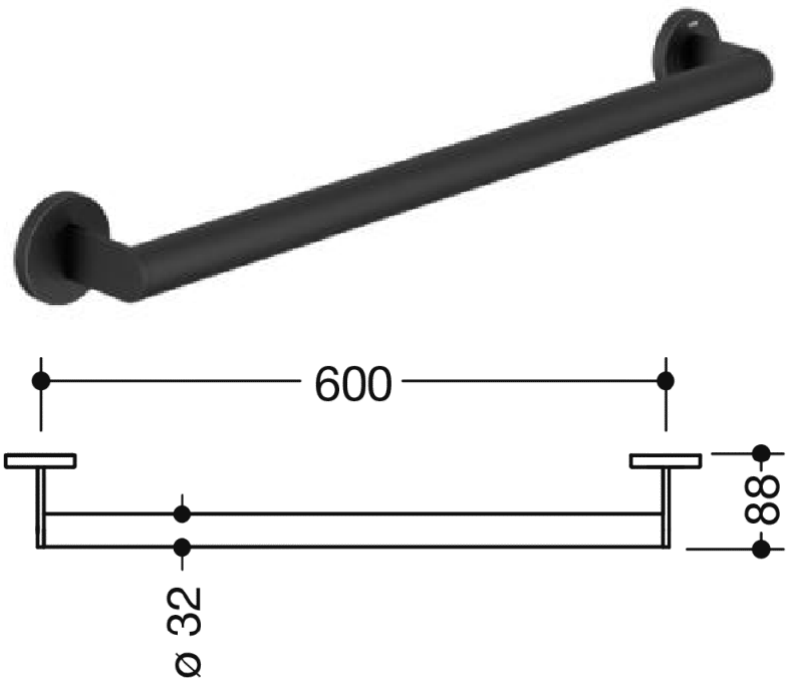

Revision	Date	Revision	Date

ARK
Room 1303-4,13/F, Block A, Seaview Estate, 2 Watson Road, North Point Hong Kong T 26336383 F 26330933

SANITARY SCHEDULE	Project:	7-9 PING LAN STREET, AP LEI HAU
	Client:	WANG ON
	Job No:	I215
	Date:	250414

GRAB BAR

CODE: CH-SF-09 (option 2)

Supplier:	Massford (HK) Ltd	**Item:**	GRAB BAR
Contact:	Sean wong	**Origin:**	-
T:	(852) 2891 6860 / 9856 5530	**Model:**	"KEUCO" 35001-370600 Grab bar
F:	(852) 2834 3029		
E:	seanwong@massford.com		
		Colour:	Matt black
		Dimension:	Refer to drawing
		Finish:	Powder coated
		Location:	Clubhouse male & disable restroom
		Delivery:	-
		Remarks:	-

Notes:

Product Image:

Revision	Date	Revision	Date

ARK
Room 1303-4,13/F, Block A, Seaview Estate, 2 Watson Road, North Point Hong Kong T 26336383 F 26330933

SANITARY SCHEDULE	Project:	7-9 PING LAN STREET, AP LEI HAU
	Client:	WANG ON
	Job No:	I215
	Date:	250414

SWING UP GRAB BAR

CODE: CH-SF-10

Supplier:	Massford (HK) Ltd	**Item:**	SWING UP GRAB BAR
Contact:	Sean wong	**Origin:**	GERMANY
T:	(852) 2891 6860 / 9856 5530	**Model:**	"HEWI" 900.50.10460-DC WALL MOUNTED SWING UP GRAB BAR
F:	(852) 2834 3029		
E:	seanwong@massford.com		
		Colour:	Matt black
		Dimension:	Refer to drawing
		Finish:	Powder coated
		Location:	Clubhouse male & disable restroom
		Delivery:	-
		Remarks:	-

Notes:

Product Image:

HEWI

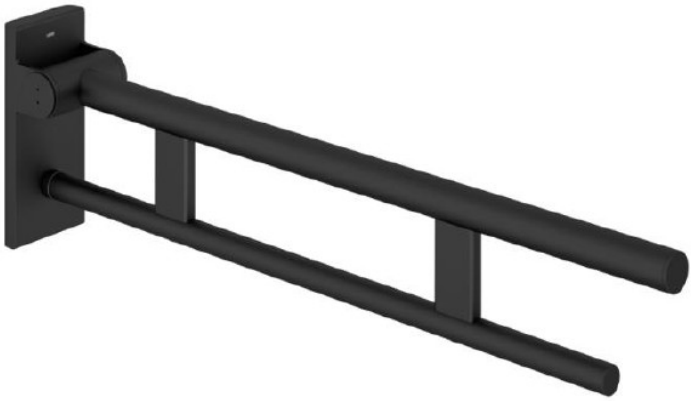

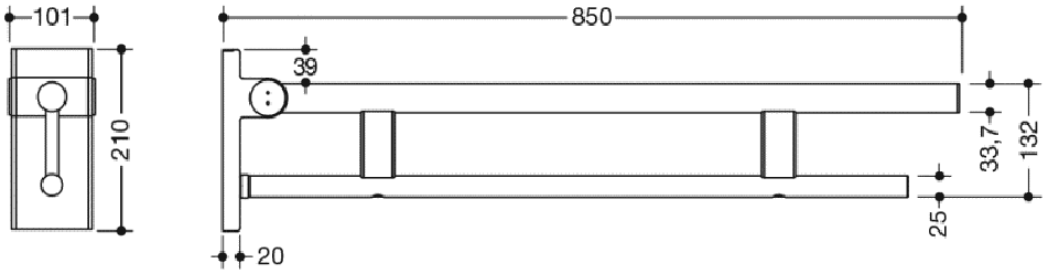

Revision	Date	Revision	Date

ARK
Room 1303-4,13/F, Block A, Seaview Estate, 2 Watson Road, North Point Hong Kong T 26336383 F 26330933

SANITARY SCHEDULE	Project:	7-9 PING LAN STREET, AP LEI HAU
	Client:	WANG ON
	Job No:	I215
	Date:	250414

ADJUSTABLE MIRROR

CODE: CH-SF-11

Supplier:	Massford (HK) Ltd	**Item:**	MIRROR
Contact:	Sean wong	**Origin:**	
T:	(852) 2891 6860 / 9856 5530	**Model:**	H2O PRO Z162-2439
F:	(852) 2834 3029	**Colour:**	S/S
E:	seanwong@massford.com	**Dimension:**	980 x 600mm
		Finish:	Front part: polished; Side part: satin
		Location:	Clubhouse male & disable restroom
		Delivery:	-
		Remarks:	Accessories

Notes:"H2O PRO" Z162-2439 SURFACE MOUNTED ADJUSTABLE MIRROR, SATIN S.S. FINISH
SIZE : 600 x 980mm

Product Image:

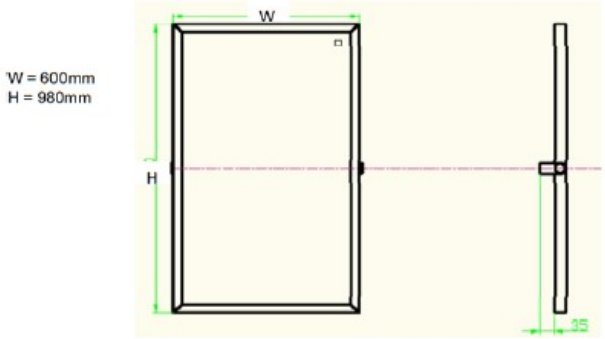

Revision	Date	Revision	Date

ARK
Room 1303-4,13/F, Block A, Seaview Estate, 2 Watson Road, North Point Hong Kong T 26336383 F 26330933

SANITARY SCHEDULE	**Project:** **7-9 PING LAN STREET, AP LEI HAU** **Client:** WANG ON **Job No:** I215 **Date:** 250414

SOAP DISPENSER — CODE: CH-SF-12

Supplier:	Massford (HK) Ltd	**Item:**	SENSOR SOAP DISPENSER
Contact:	Sean wong	**Origin:**	
T:	(852) 2891 6860 / 9856 5530	**Model:**	"H2O PRO" 3986-V2-CU-AC-FOAM-F302 deck mounted sensor soap dispenser
F:	(852) 2834 3029	**Colour:**	Bronze
E:	seanwong@massford.com	**Dimension:**	Refer to Drawing
		Finish:	PVD Brushed bronze finish
		Location:	Clubhouse male & disable restroom
		Remarks:	A/C operate

Notes:

Product Image:

F302
PVD Brushed bronze

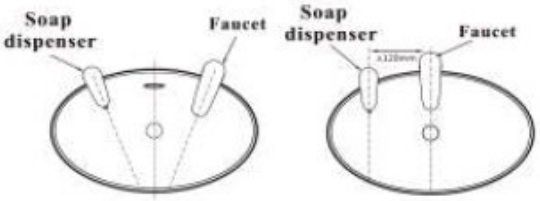

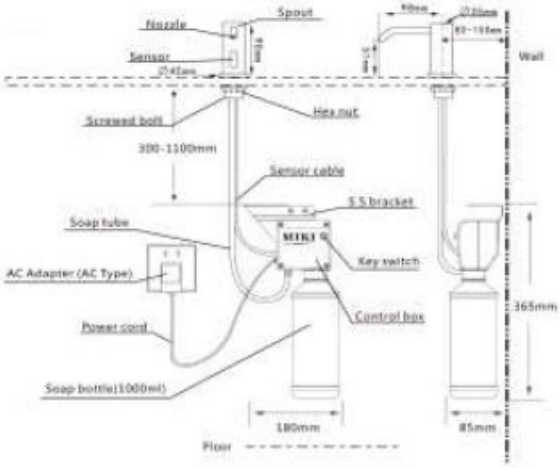

Revision	Date	Revision	Date

ARK
Room 1303-4,13/F, Block A, Seaview Estate, 2 Watson Road, North Point Hong Kong T 26336383 F 26330933

SANITARY SCHEDULE	**Project:** **7-9 PING LAN STREET, AP LEI HAU** **Client:** WANG ON **Job No:** I215 **Date:** 250414

PAPER HOLDER

CODE: CH-SF-13

Supplier:	Massford (HK) Ltd	**Item:**	TOILET PAPER HOLDER
Contact:	Sean wong	**Origin:**	
T:	(852) 2891 6860 / 9856 5530	**Model:**	"KAWAJUN" SE-39W-003 double paper roll holder with shelf
F:	(852) 2834 3029		
E:	seanwong@massford.com	**Colour:**	Matt black
		Dimension:	Refer to Drawing
		Finish:	-
		Location:	Clubhouse female, male & disable restroom
		Remarks:	-

Notes:

Product Image:

Item Photo Image & Details :

KAWAJUN

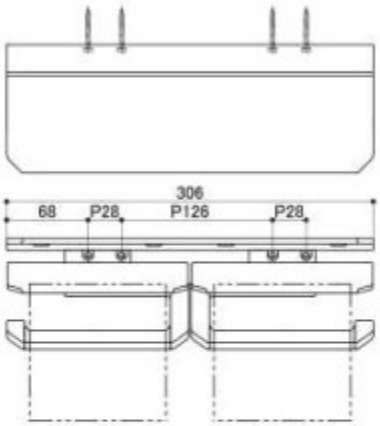

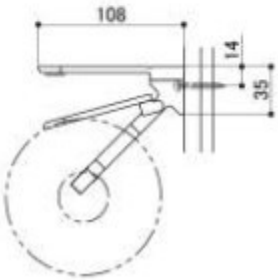

Revision	Date	Revision	Date

ARK
Room 1303-4,13/F, Block A, Seaview Estate, 2 Watson Road, North Point Hong Kong T 26336383 F 26330933

SANITARY SCHEDULE	Project:	7-9 PING LAN STREET, AP LEI HAU
	Client:	WANG ON
	Job No:	I215
	Date:	250414

WASTE BIN	CODE:	CH-SF-14

Supplier:	Massford (HK) Ltd	**Item:**	WASTE BIN
Contact:	Sean wong	**Origin:**	
T:	(852) 2891 6860 / 9856 5530	**Model:**	"BONCO" B8-3121-S-F91 wall mounted Waste bin
F:	(852) 2834 3029		
E:	seanwong@massford.com	**Colour:**	Matt black
		Dimension:	Refer to Drawing
		Finish:	-
		Location:	Clubhouse female, male & disable restroom
		Remarks:	-

Notes:

Product Image:

Item Photo Image & Details :

BONCO

F91
Matt Black

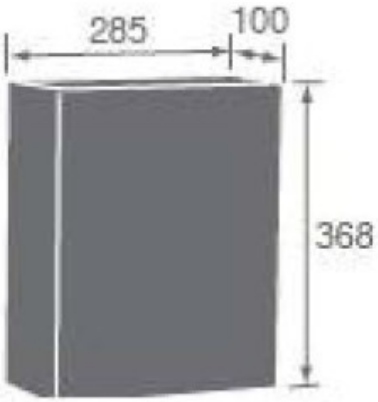

Revision	Date	Revision	Date

ARK
Room 1303-4,13/F, Block A, Seaview Estate, 2 Watson Road, North Point Hong Kong T 26336383 F 26330933

SANITARY SCHEDULE	**Project:** **7-9 PING LAN STREET, AP LEI HAU** **Client:** WANG ON **Job No:** I215 **Date:** 250414

FLOOR DRAIN COVER

CODE: CH-SF-15

Supplier:	Massford (HK) Ltd	**Item:**	FLOOR DRAIN MATCHING COVER
Contact:	Sean wong	**Origin:**	
T:	(852) 2891 6860 / 9856 5530	**Model:**	"H2O" TP-883-F91 floor drain cover
F:	(852) 2834 3029		
E:	seanwong@massford.com	**Colour:**	Matt black
		Dimension:	Refer to Drawing
		Finish:	-
		Location:	Clubhouse female, male & disable restroom
		Remarks:	-

Notes:

Product Image:

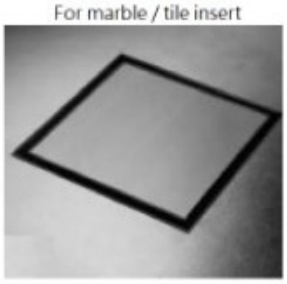

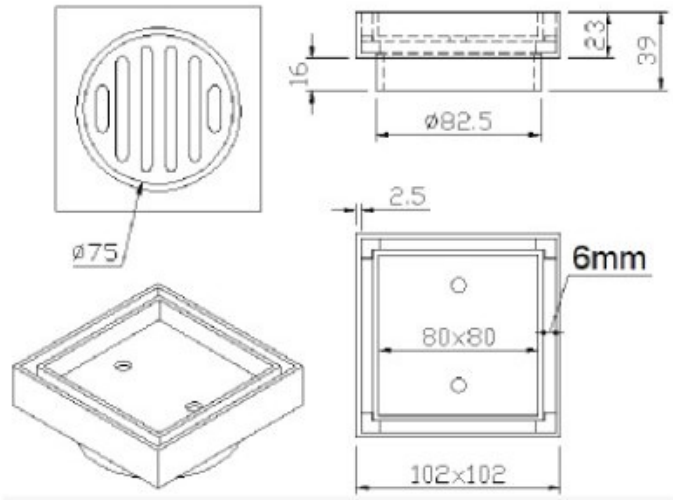

Revision	Date	Revision	Date

ARK
Room 1303-4,13/F, Block A, Seaview Estate, 2 Watson Road, North Point Hong Kong T 26336383 F 26330933

SANITARY SCHEDULE	Project:	7-9 PING LAN STREET, AP LEI HAU
	Client:	WANG ON
	Job No:	I215
	Date:	250414

URINAL

CODE: CH-SF-16

Supplier:	Massford (HK) Ltd	**Item:**	URINAL WITH INTEGRATED SENSOR
Contact:	Sean wong	**Origin:**	-
T:	(852) 2891 6860 / 9856 5530	**Model:**	"DURAVIT" ME by Strack 280931 urinal With integrated sensor
F:	(852) 2834 3029		
E:	seanwong@massford.com	**Colour:**	White
		Dimension:	Refer to Drawing
		Finish:	-
		Location:	Clubhouse male & disable restroom
		Remarks:	-AC power -HKWSD GA no.: C20230237F

Notes:

Product Image:

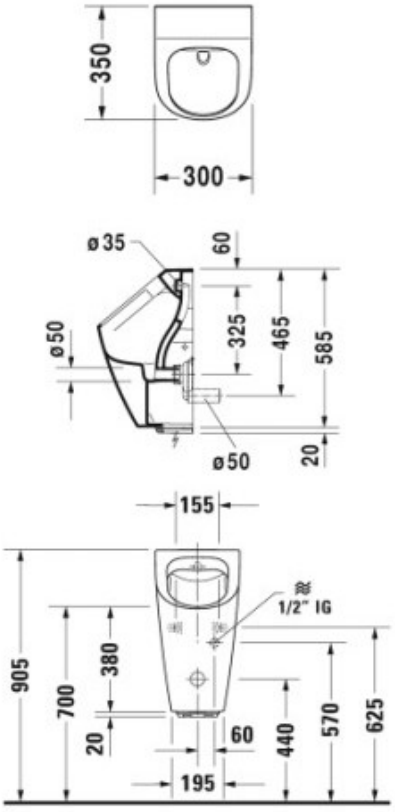

Revision	Date	Revision	Date

ARK
Room 1303-4,13/F, Block A, Seaview Estate, 2 Watson Road, North Point Hong Kong T 26336383 F 26330933

SANITARY SCHEDULE	**Project:** 7-9 PING LAN STREET, AP LEI HAU **Client:** WANG ON **Job No:** I215 **Date:** 250414

URINAL PARTITION — CODE: CH-SF-17

Supplier:	Massford (HK) Ltd	**Item:**	URINAL PARTITION
Contact:	Sean wong	**Origin:**	-
T:	(852) 2891 6860 / 9856 5530	**Model:**	"DURAVIT" 850000
F:	(852) 2834 3029		
E:	seanwong@massford.com	**Colour:**	White
		Dimension:	Refer to Drawing
		Finish:	-
		Location:	Clubhouse male & disable restroom
		Remarks:	-

Notes:

Product Image:

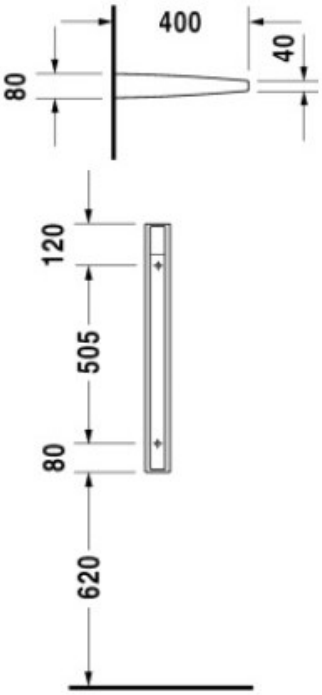

Revision	Date	Revision	Date

ARK
Room 1303-4,13/F, Block A, Seaview Estate, 2 Watson Road, North Point Hong Kong T 26336383 F 26330933

SANITARY SCHEDULE	Project:	7-9 PING LAN STREET, AP LEI HAU
	Client:	WANG ON
	Job No:	I215
	Date:	250414

ROBE HOOK	CODE:	CH-SF-18

Supplier:	Massford (HK) Ltd	**Item:**	ROBE HOOK
Contact:	Sean wong	**Origin:**	-
T:	(852) 2891 6860 / 9856 5530	**Model:**	"BONCO" B8-ZP12-83-F91 single robe hook
F:	(852) 2834 3029	**Colour:**	Matt black
E:	seanwong@massford.com	**Dimension:**	Refer to Drawing
		Finish:	-
		Location:	Clubhouse female, male & disable restroom
		Remarks:	-

Notes:

Product Image:

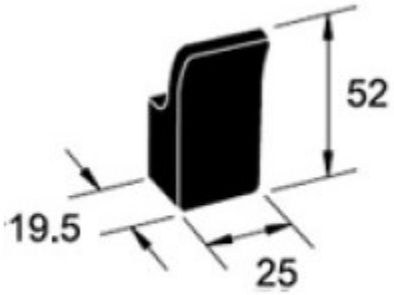

Revision	Date	Revision	Date

ARK
Room 1303-4,13/F, Block A, Seaview Estate, 2 Watson Road, North Point Hong Kong T 26336383 F 26330933

SANITARY SCHEDULE	Project:	7-9 PING LAN STREET, AP LEI HAU
	Client:	WANG ON
	Job No:	I215
	Date:	250414

HAND DRYER — CODE: CH-SF-19

Supplier:	Massford (HK) Ltd	**Item:**	HAND DRYER
Contact:	Sean wong	**Origin:**	-
T:	(852) 2891 6860 / 9856 5530	**Model:**	"DYSON" airblade V Hand dryer
F:	(852) 2834 3029		
E:	seanwong@massford.com	**Colour:**	Silver
		Dimension:	Refer to Drawing
		Finish:	Sprayed Nickel
		Location:	Clubhouse female, male & disable restroom
		Remarks:	- 12 second dry time - Hygienic performance with HEPA filter

Notes:

Product Image:

Product Description : "DYSON" AIRBLADE V HAND DRYER, SPRAYED NICKEL FINISH
- 12 SECOND DRY TIME
- HYGIENIC PERFORMANCE WITH HEPA FILTER
- ALSO AVAILABLE IN WHITE

Item Photo Image & Details :

dyson

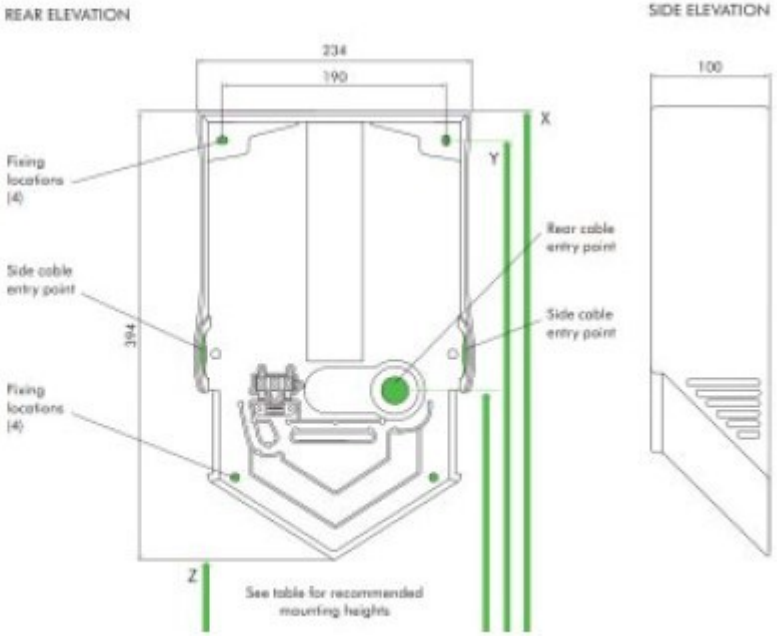

ARK
Room 1303-4,13/F, Block A, Seaview Estate, 2 Watson Road, North Point Hong Kong T 26336383 F 26330933

SANITARY SCHEDULE	Project: 7-9 PING LAN STREET, AP LEI HAU Client: WANG ON Job No: I215 Date: 250414

SINK MIXER

CODE: CH-SF-19

Supplier: Arnhold & Co. Ltd. **Contact:** Mr. Keith Chan T: (852) 2806 4505 / 9324 8881 **F:** - **E:** keithchan@arnhold.com.hk	**Item:** SINK MIXER **Origin:** Italy **Model:** TRM-IT-1334NN40ZZ + LOC-052120699 **Colour:** - **Dimension:** refer to drawings **Finish:** BLACK **Location:** Function room 2 **Delivery:** - **Price:** - **Remark:** with water certificate

Notes:

Product Image:

Treemme IT1334-YY (13340540ZZ) + RTSA117-NN
deck-mouned sensor tap with pop-up waste
WSD GA: C20211377 until 8 Nov 2026
WSD WELS: TN 22-0022 in Grade 1 - 3.7L/min
Finish: Matt Black

Schell 052120699 angle valve for the tap
WSD GA: C20210239 until 10-Sep-2025
Finish: Chrome Plated

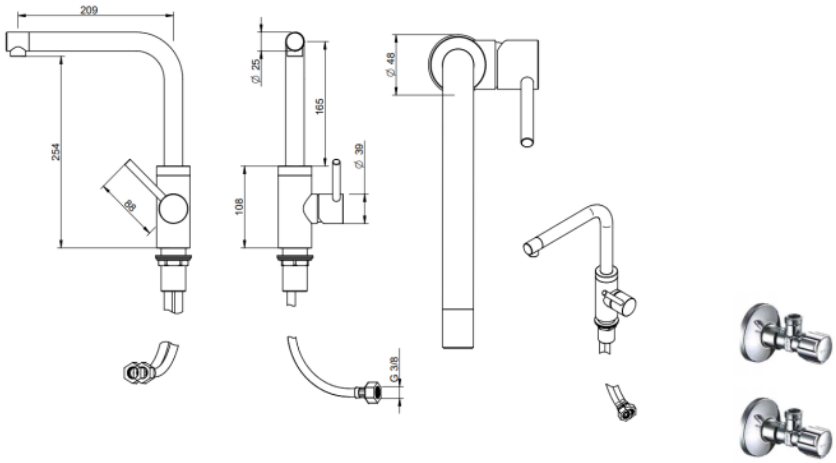

Revision	Date	Revision	Date
1	240729		

ARK
Room 1303-4,13/F, Block A, Seaview Estate, 2 Watson Road, North Point Hong Kong T 26336383 F 26330933

SANITARY SCHEDULE	Project: 7-9 PING LAN STREET, AP LEI CHAU Client: WANG ON Job No: I215 Date: 250430

KITCHEN SINK

CODE: CH-SF-22

Supplier: Massford (HK) Ltd **Contact:** Mr. Ryan Chu **T:** (852)2891 6860/ 9018 0319 **F:** (852)2834 3029 **E:** ryanchu@massford.com SUPPLY & INSTALL BY MC	**Item:** PANTRY SINK **Origin:** - **Model:** "H2O PRO" PZX110-54A S/S, UNDERCOUNTER S/S SINGLE BOWL SINK, S/S FINISH **Dimension:** refer to drawings **Finish:** - **Location:** Function room 2 **Delivery:** -

Notes:

Product Image:

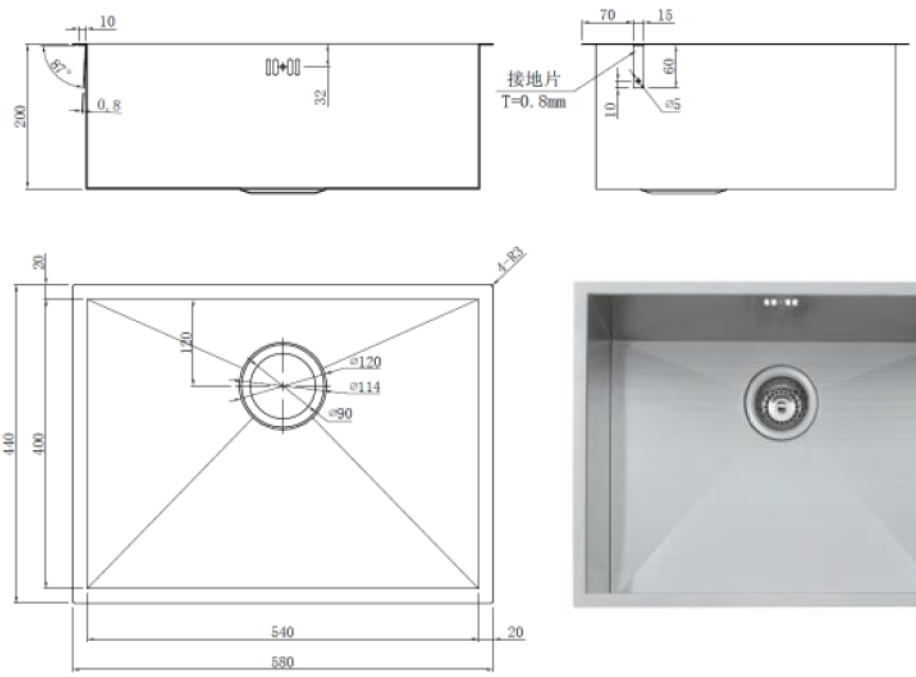

Revision	Date	Revision	Date
1	240729		